6 Foot Deluxe Park Bench

For Fastener Pack
(FP-DB6B-CU-02)

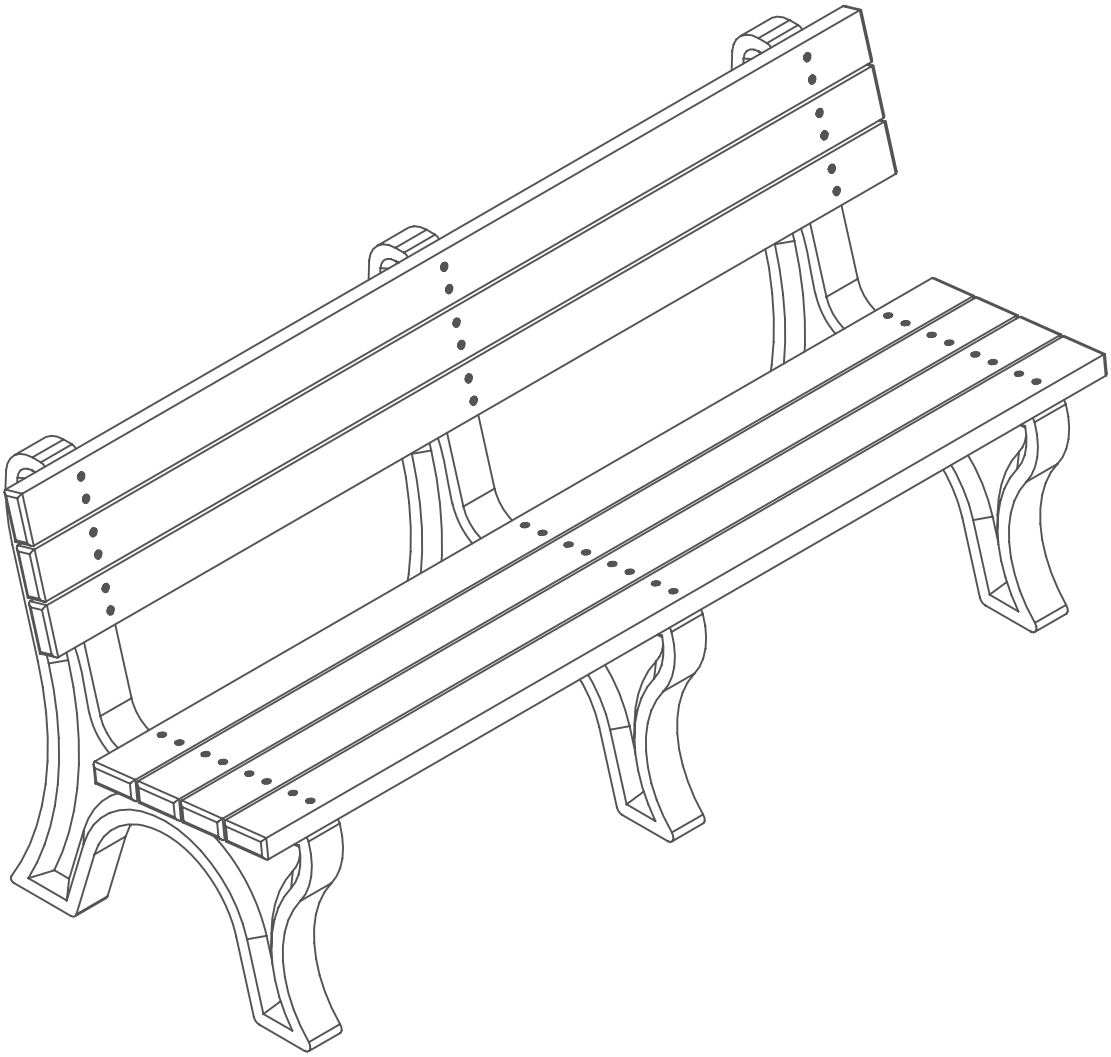

Congratulations ! !
You have just purchased the finest recycled plastic park bench available. Enjoy ! ! !

FS-DB6B-CAP-02

Before assembly, please make sure all components are included.

(1) - One Fastener Pack
FP-DB6B-CU-02

FP - Fastener Pack

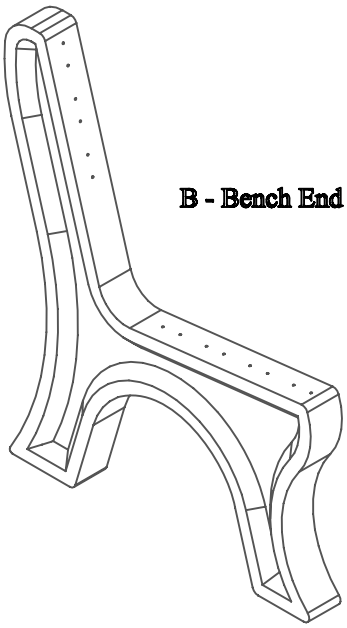

B - Bench End

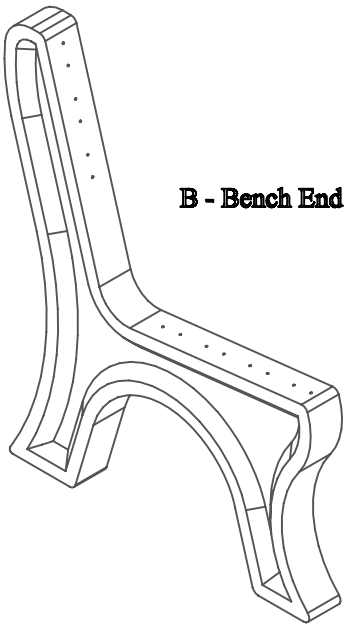

B - Bench End

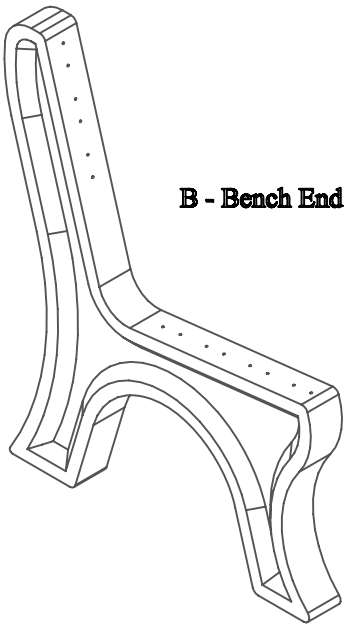

B - Bench End

(3) - Three Bench Ends
PS-SBBE-D-02

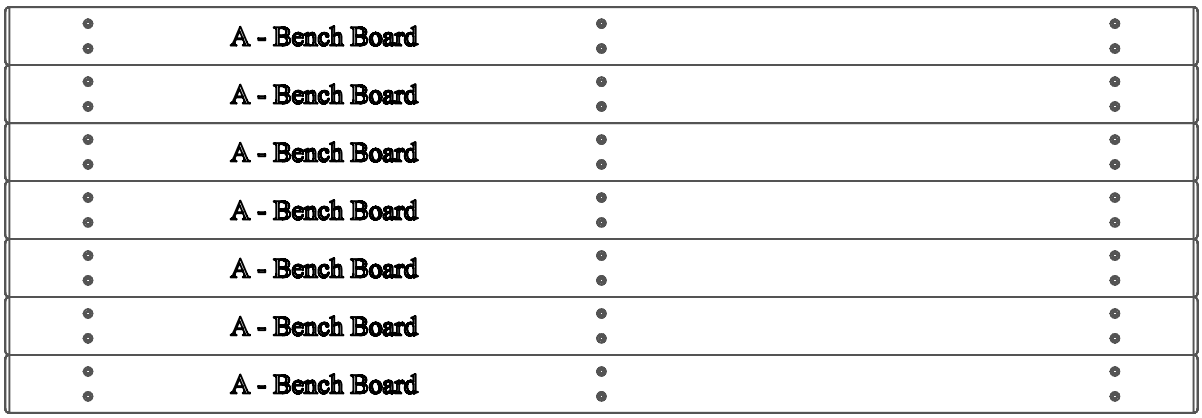

(7) - Seven Bench Boards
BP-DB6B-A-02

FS-DB6B-CAP-02

Before assembly, please make sure all fasteners are included.

42 - #12 x 3" Flat Head Phillips Screw

Also needed for this assembly will be the following materials:

1 - #3 Phillips Drive Bit

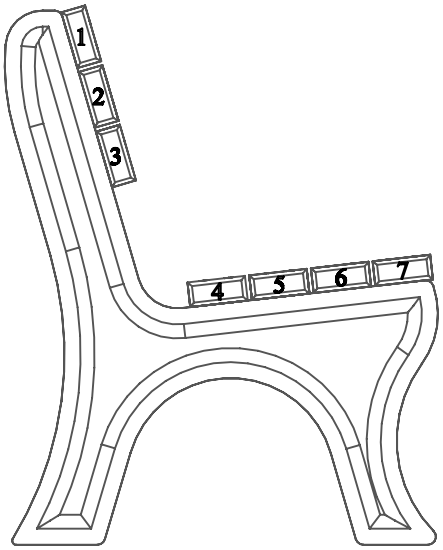

Fig #1:
In order to make the assembly of this Deluxe Bench easier while going through the assembly process the board positions are numbered and will be referenced in later steps.

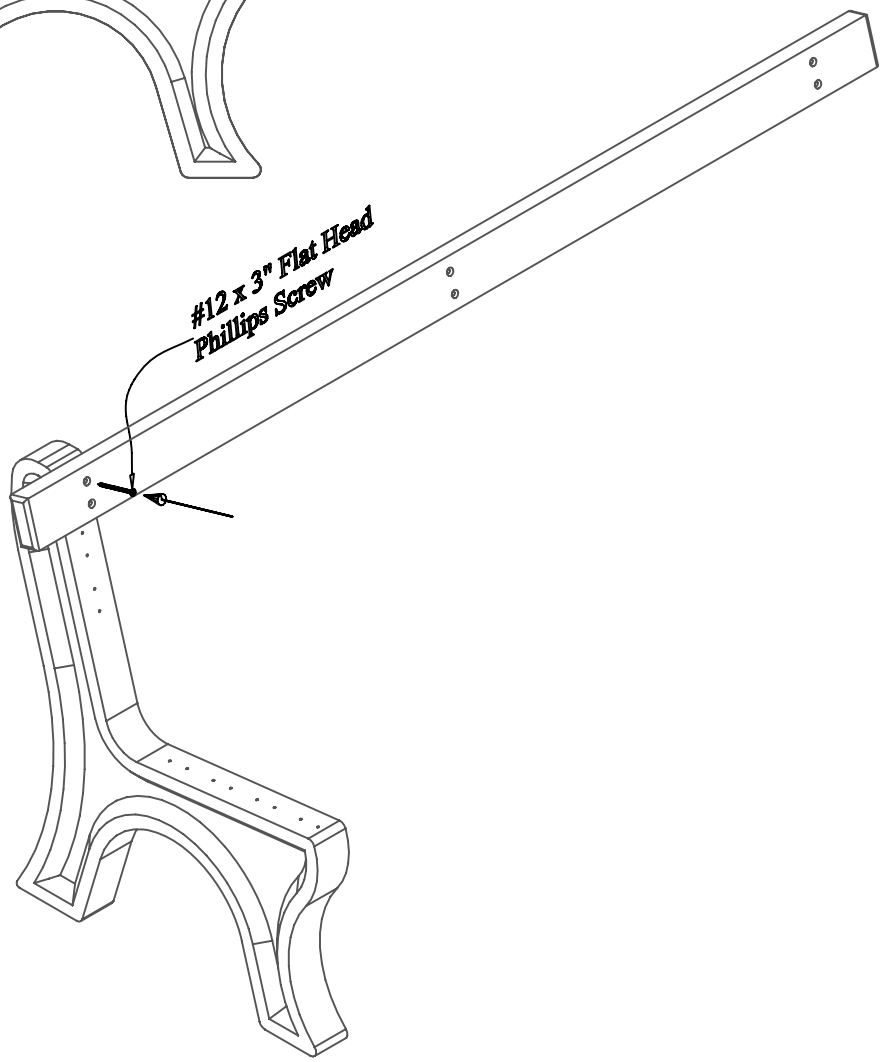

Step #1:
Stand (1) One bench end upright and place (1) One bench board on position 1 being sure to align the pre-drilled holes to the pilot holes in the bench end. After the holes are properly aligned, fasten with (1) One #12 x 3" Flat Head Phillips Screw in the top pre-drilled hole.

Note: Do not tighten screw completely. This will be done in a later step.

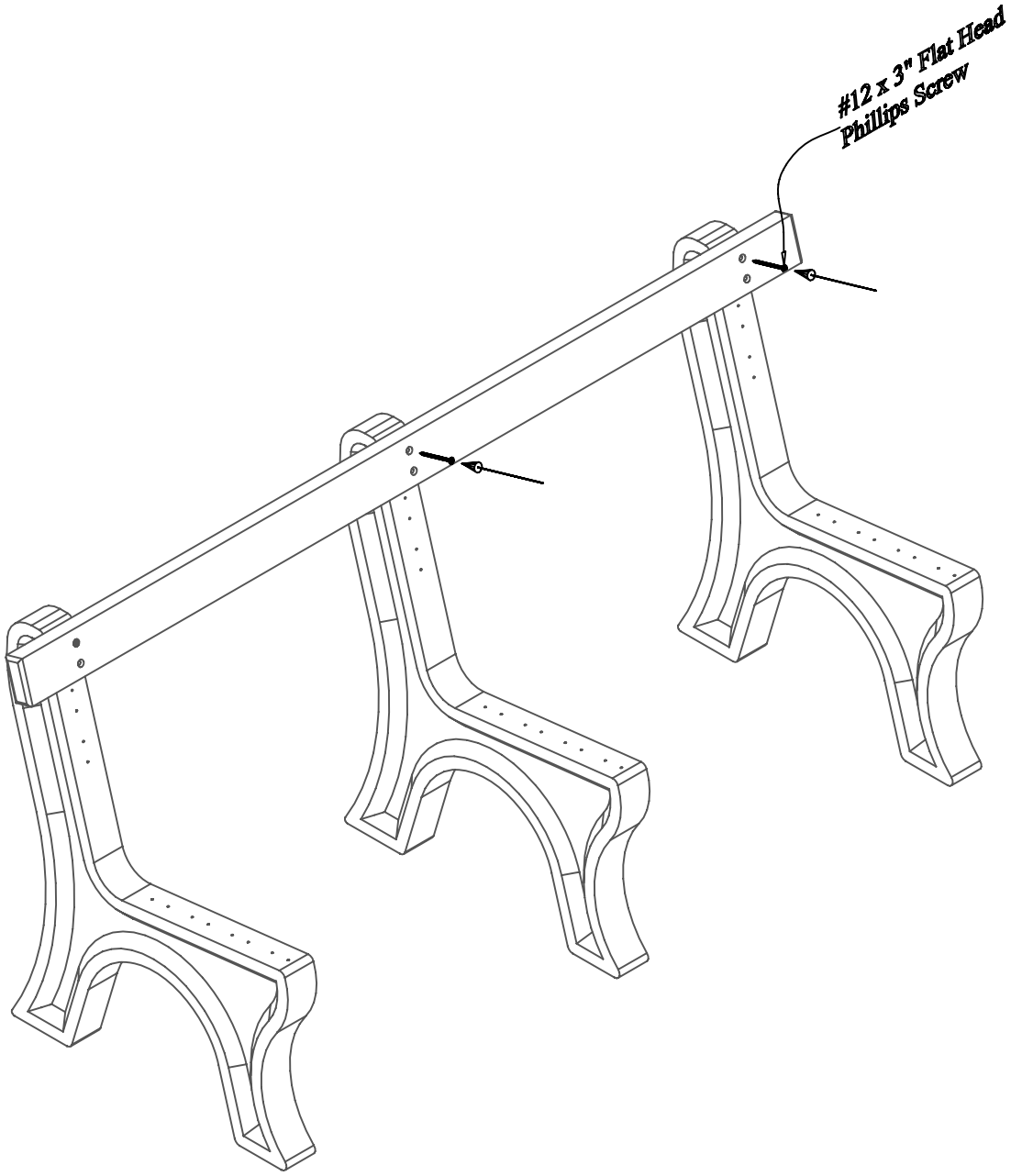

Step #2:
Stand the other (2) Two bench ends upright, one at a time, and place the bench board already attached to the first bench end, on position 1 being sure to align the pre-drilled holes to the pilot holes in the bench end. After the holes are properly aligned, fasten with (1) One #12 x 3" Flat Head Phillips Screw in the top pre-drilled hole.

Note: Do not tighten screws completely. This will be done in a later step.

Step #3:
Align bottom pre-drilled holes to the pilot holes in the bench end. After the holes are properly aligned, fasten with (1) One #12 x 3" Flat Head Phillips Screw per hole.

Note: Be sure to tighten screws completely after this step.

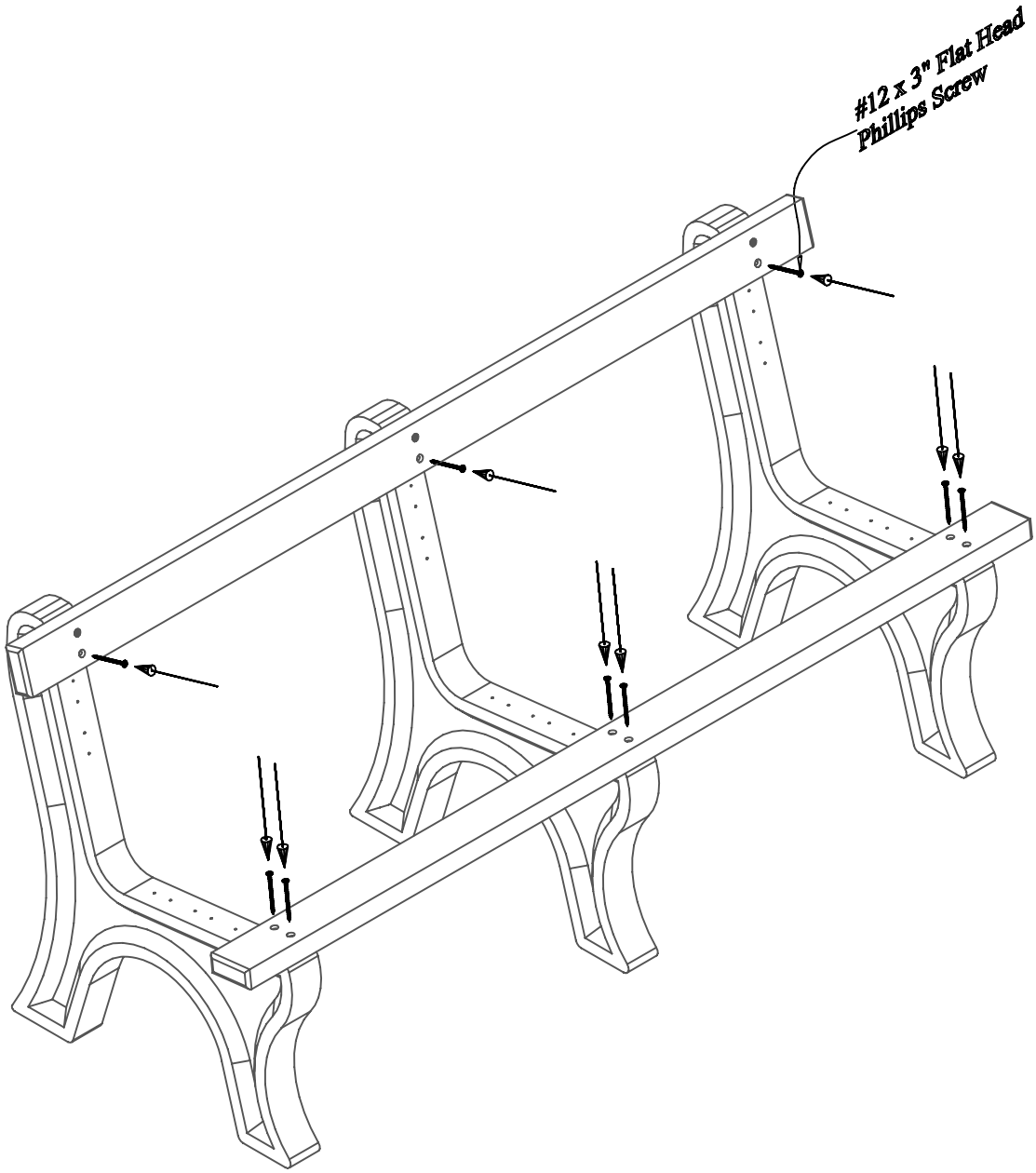

Step #4:
Place a second bench board on position 7. Repeat Steps 1 - 3 to attach.
Use (1) One #12 x 3" Flat Head Phillips Screw per hole to fasten.

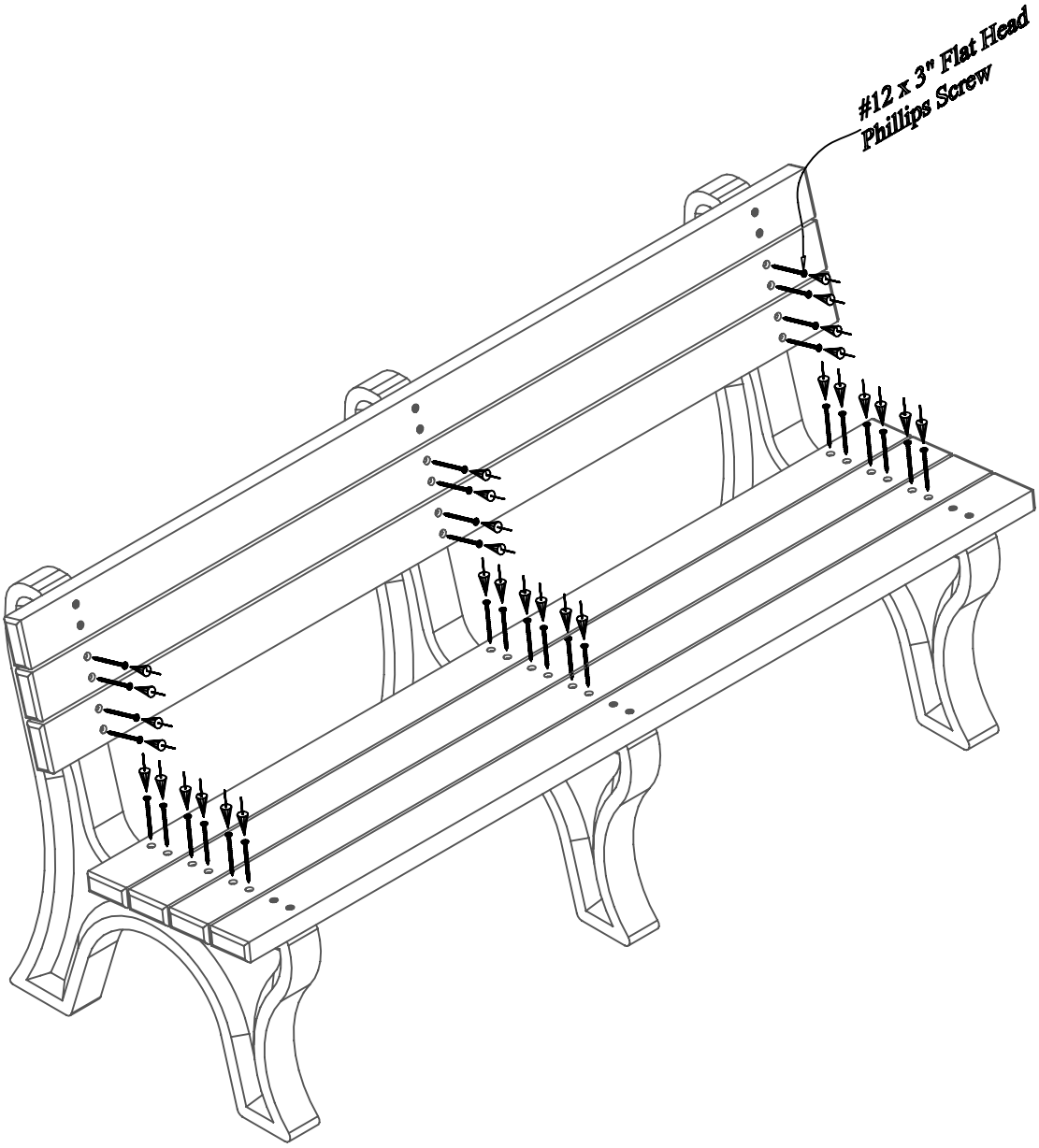

Step #5:
Repeat Steps 1 - 3 to attach bench boards on positions 2, 3, 4, 5 & 6. Use (1) One #12 x 3" Flat Head Phillips Screw per hole to fasten.