Econo-Mizer Plaza Handicap Picnic Table

For Fastener Pack
(FP-EPZHA-CU-00)

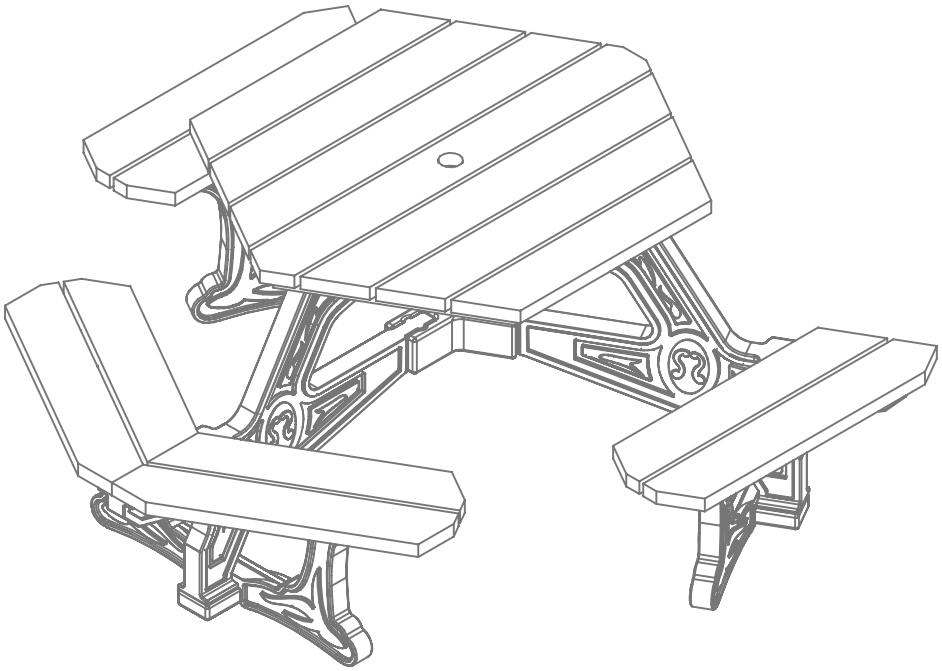

Congratulations ! !
You have just purchased the finest recycled plastic picnic table available. Enjoy ! ! !

Before assembly, please make sure all components are included.

(1) - One Table Top
GSSA-PZHA-A-00

J - Table Top

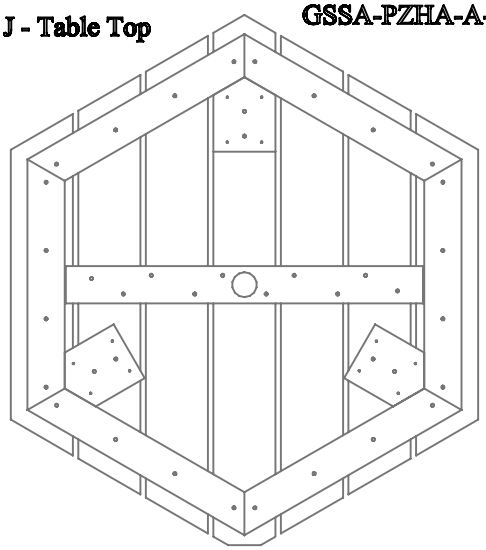

(1) - One Inside Rightt Seat
OTP-LWP-B-00

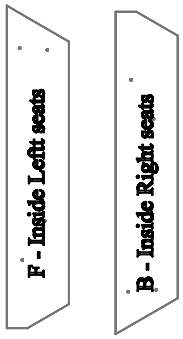

(1) - One Inside Left Seat
OTP-LWP-F-00

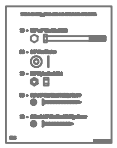

FP - Fastener Pack

(1) - One Fastener Pack
FP-EPZ-CU-00

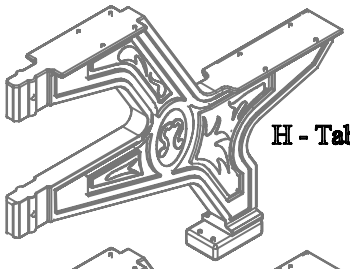

H - Table Leg

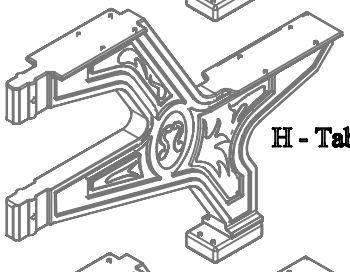

H - Table Leg

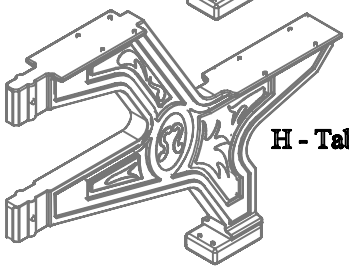

H - Table Leg

(3) - Three Table Legs
GSSA-PZ-B-01

(1) - One Outside Left Seat
OTP-LWP-G-00

(1) - One Long Left HA Support
OTP-LWPHA-F-00

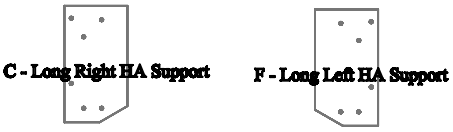

(1) - One Long Right HA Support
OTP-LWPHA-C-00

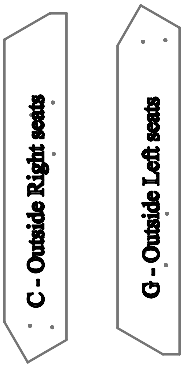

(1) - One Outside Right Seat
OTP-LWP-C-00

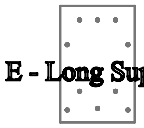

(1) - One Long Support
OTP-LWP-E-00

(4) - Four Short Supports
OTP-LWP-D-00

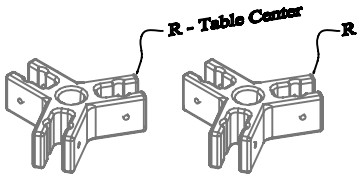

(2) - Two Table Centers
PS-GSCP-A-01

(1) - One Inside Leftt Seat
OTP-LWPHA-A-00

(1) - One Outside Right Seat
OTP-LWPHA-E-00

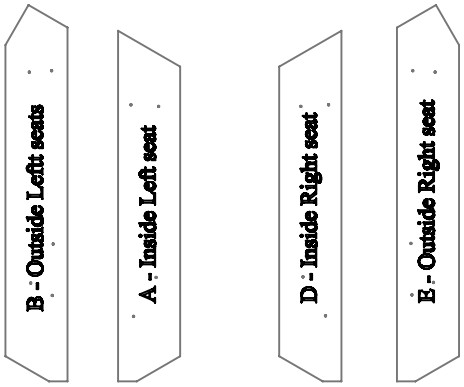

(1) - One Outside Left Seat
OTP-LWP-B-00

(1) - One Inside Right Seat
OTP-LWPHA-D-00

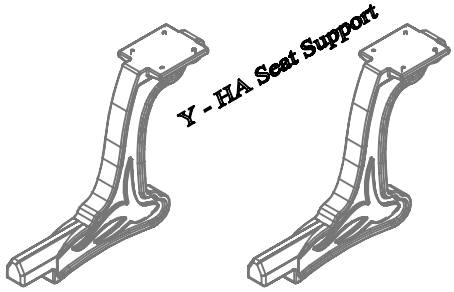

(2) - Two HA Seat Supports
PS-GSSS-B-01

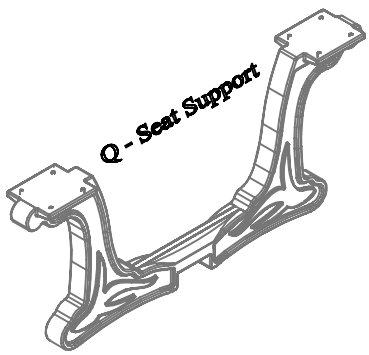

(1) - One Seat Supports
PS-GSSS-A-01

FS-EPZHA-CAP-00

Before assembly, please make sure all fasteners are included.

6 - 3/8" x 4-1/4" Hex Head Bolt

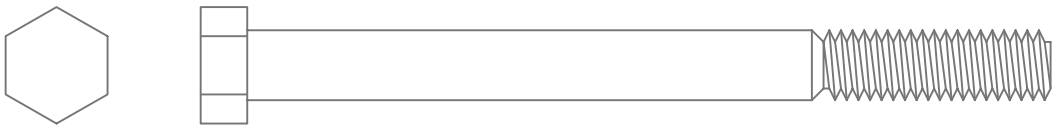

12 - 3/8" Flat Washer

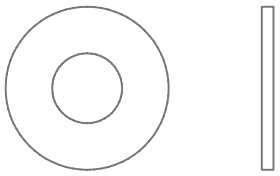

6 - 3/8" Nylon Lock Nut

6 - #12 x 3" Flat Head Phillips Screw

14 - #12 x 2" Flat Head Phillips Screw

32 - #12 x 1 1/2" Pan Head Phillips Screw

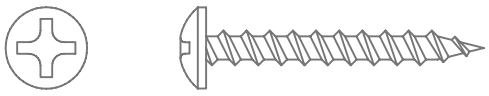

16 - #12 x 1" Pan Head Phillips Screw

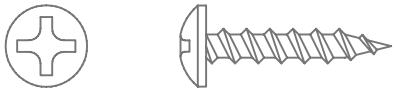

Also needed for this assembly will be the following materials:

1 - #3 Phillips Drive Bit

2 - 9/16" Socket Wrench

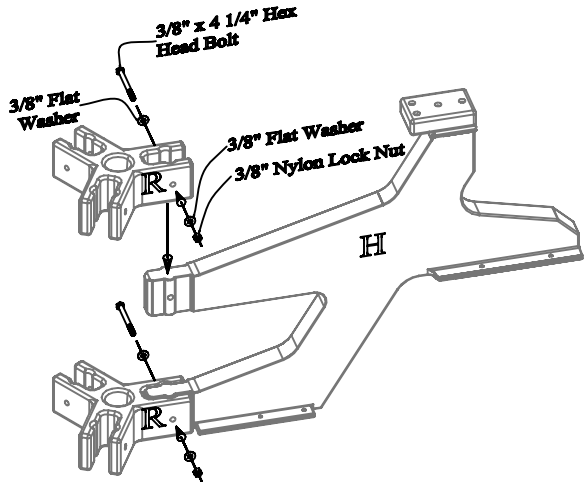

Step #1:
Slide (1) One Table Center on to each end of the Table Leg as shown above. Use (1) One 3/8" x 4 1/4" Hex Head Bolt and (1) One 3/8" Flat Washer along with (1) One 3/8" Flat Washer and (1) One 3/8" Nylon Lock Nut per hole to secure.

Do not tighten bolts completely. This will be done in a later step.

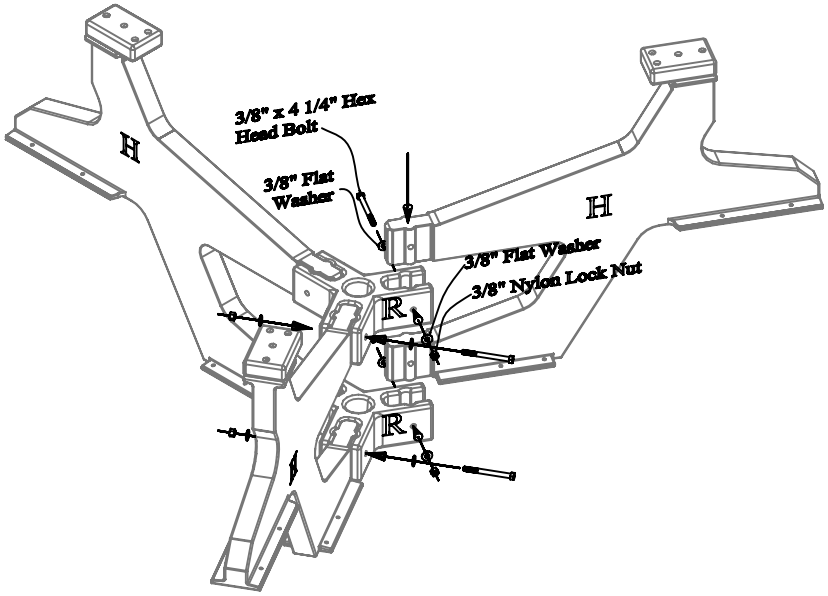

Step #2:
Slide the remaining Table Legs in to the Table Centers. Use (1) One 3/8" x 4 1/4" Hex Head Bolt and (1) One 3/8" Flat Washer along with (1) One 3/8" Flat Washer and (1) One 3/8" Nylon Lock Nut per hole to secure.

Do not tighten bolts completely. This will be done in a later step.

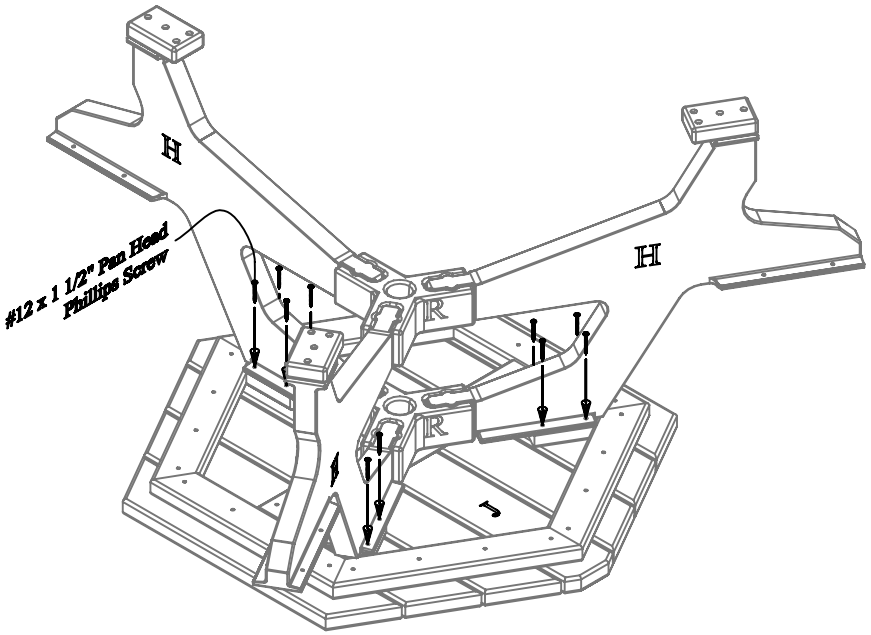

Step #3:
While the Table Top is upside down, place the leg assembly onto the Table Top as shown above. Align the pre-drilled holes in the Table Legs with the pilot holes in the Table Top. Use (1) One #12 x 1 1/2" Pan Head Screw per hole to secure.

Be sure to tighten all screws after completing this step.

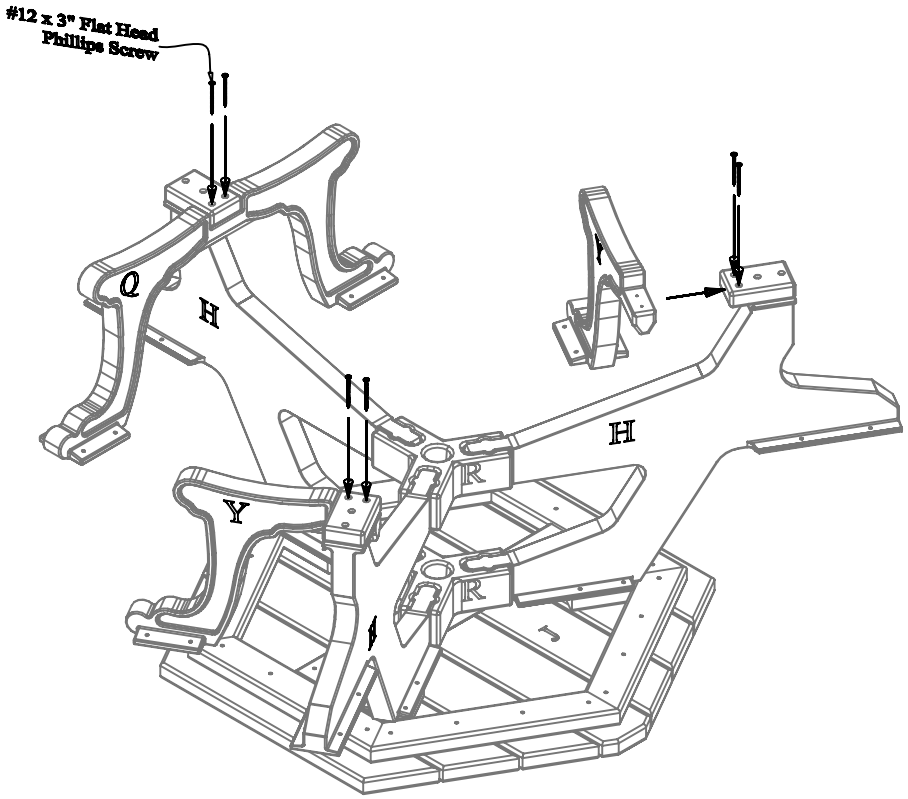

Step #4:
While the table is upside down, align the pre-drilled holes in the Table Leg to the pilot holes in the Seat Support as shown above. Use (1) One #12 x 3" Flat Head Screw per hole to secure.

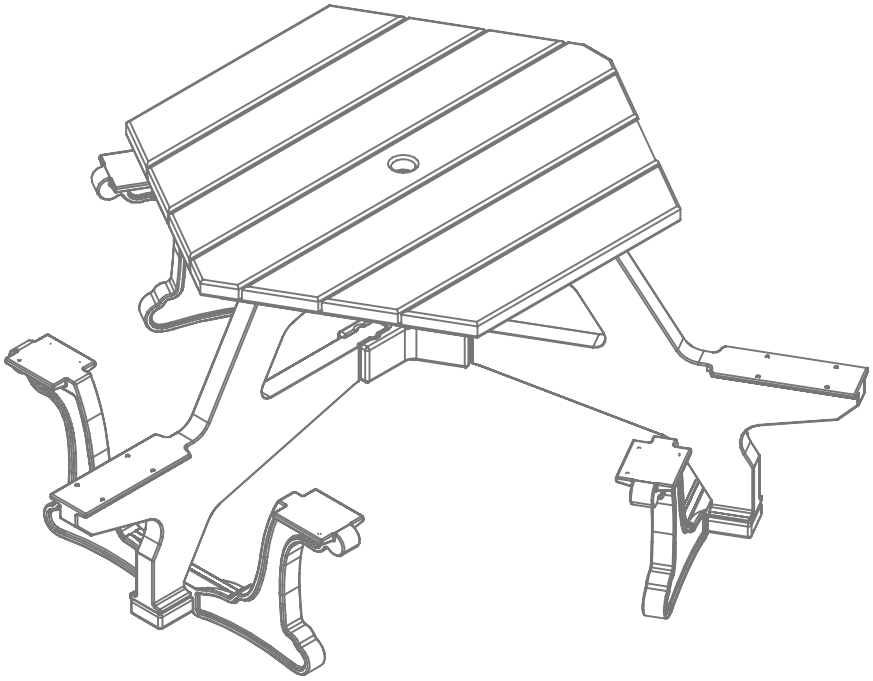

Step #5:
Flip the table upright onto it's frame. Please take caution while flipping the table.
At this point in assembly the table weighs approximately 138 Pounds.

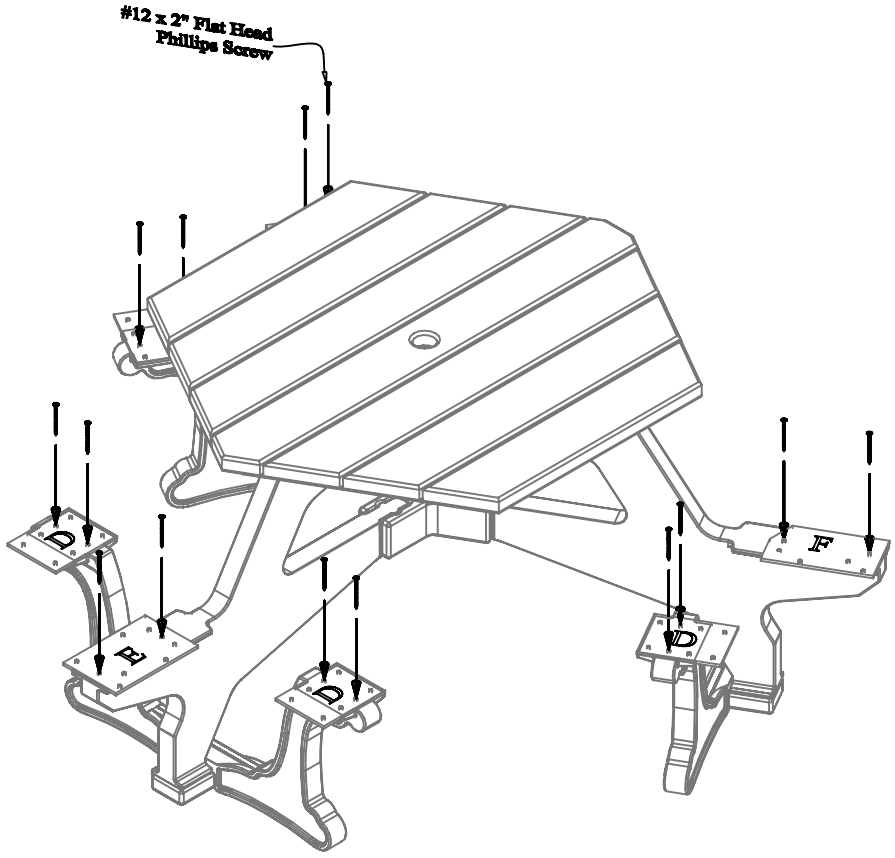

Step #6:
Place the long and short supports into place as shown above, with the holes away from the table. Align the pre-drilled holes with the pilot holes. Use (1) One #12 x 2" Flat Head screw per hole to secure.

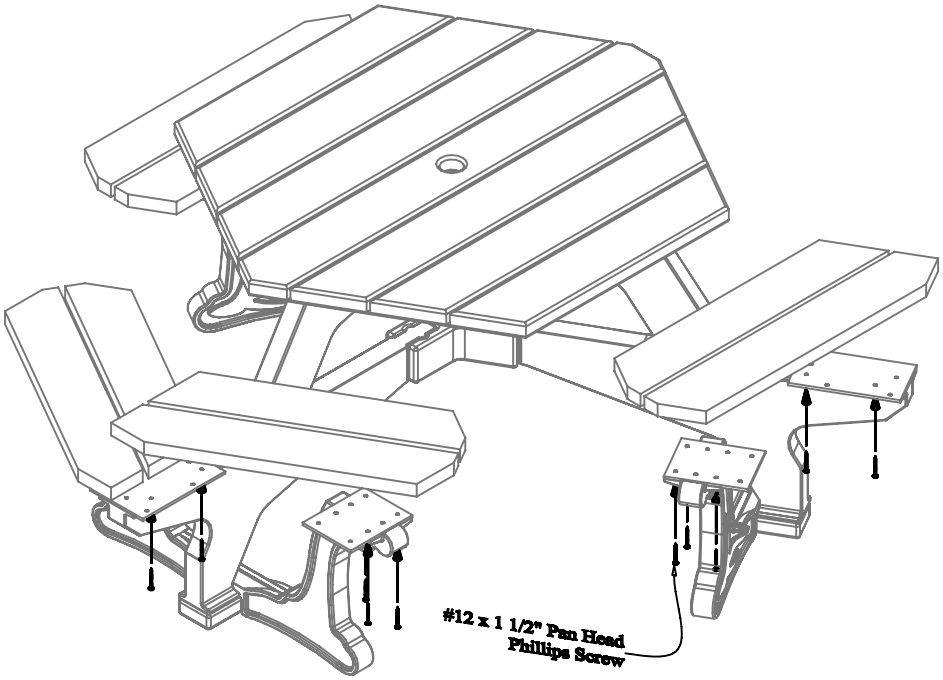

Step #7:
Place the seats into position as shown above with the pilot holes facing down. Use (1) One #12 x 1 1/2" Pan Head screw per hole to secure, making sure to put them into the leg. There will be one hole per seat not used. The unused hole does not have a pilot hole to match it.

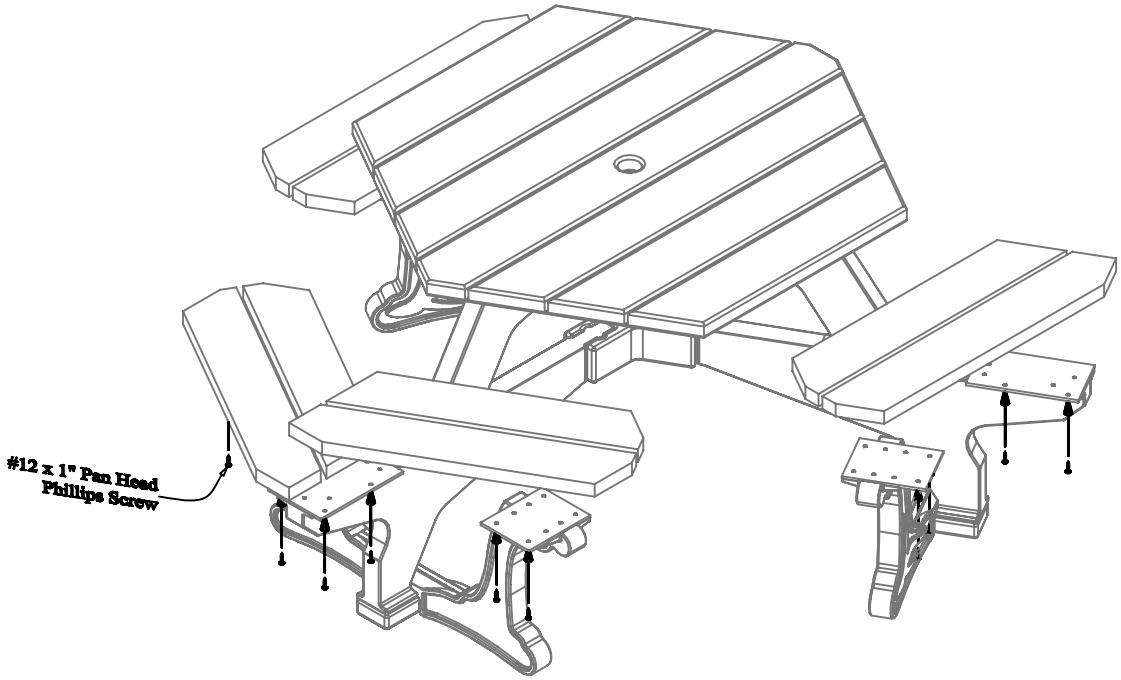

Step #7:

With the seats in position with the pilot holes faceing down. Use (1) One #12 x 1" Pan Head screw per hole to secure, making sure to put them into the support plate.